Café Suite

General Specifications

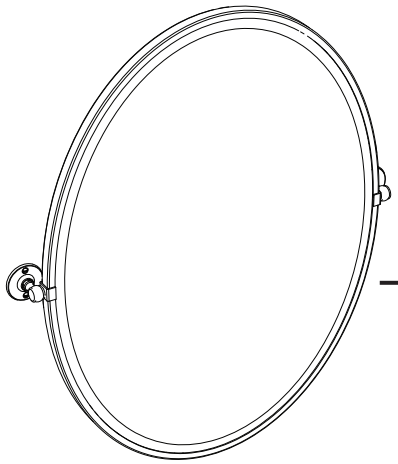

Pivoting Framed Large
Oval Mirror
(Beveled)

#4419FLG (Chrome)
#4439FLG (Satin Nickel)

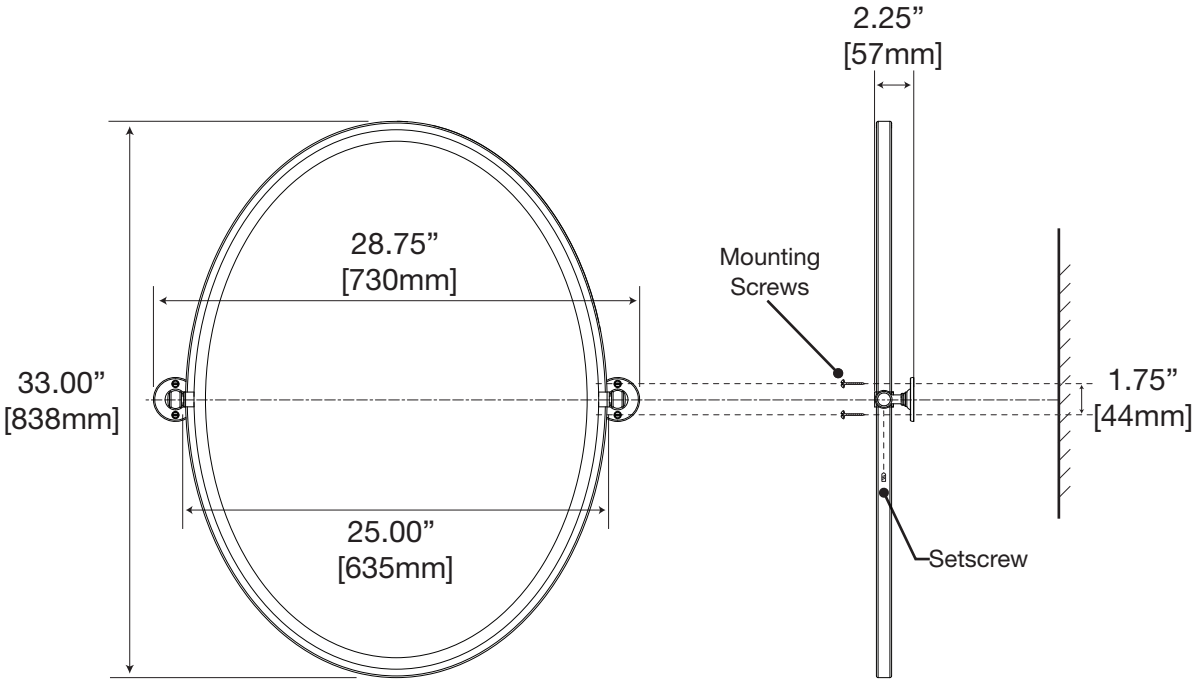

The manufacturer reserves the right to, and do time to time, make changes and improvements in designs and dimensions.
Updated on October 1, 2014